DIGITALLY CORRECTED MINIATURE 5VDC OUTPUT PRESSURE TRANSDUCER

ET-5DC-312(M) SERIES

- Barometric Pressure Transducer
- Robust Construction
- Digitally Corrected
- High Accuracy
- Silicon on Silicon Integrated Sensor **VIS**®

The ET-5DC-312 series is designed to measure barometric pressure from ground level to 30,000 feet. The ET-5DC-312, is designed with Kulite's latest dielectrically isolated Patented sensing element, coupled with digital compensation providing an analog output signal. The unit is ideally suited for applications where the accuracy requirement is of prime importance.

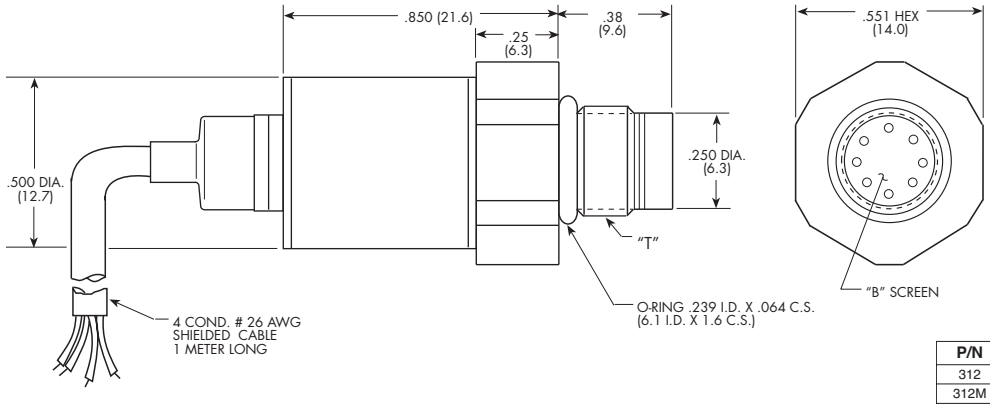

WIRING	
COLOR	DESIGNATION
RED	+ INPUT
BLACK	- INPUT
GREEN	+ OUTPUT
WHITE	FACTORY USE ONLY

P/N	"T"
312	5/16-24 UNF-2A
312M	M 8 x 1

INPUT	Pressure Range	300 mBAR to 1100 mBAR	500 mBAR to 1100 mBAR	700 mBAR to 1100 mBAR
	Operational Mode	Absolute		
	Over Pressure	2 Times Rated Pressure		
	Burst Pressure	3 Times Rated Pressure		
	Pressure Media	All Nonconductive, Noncorrosive Liquids or Gases		
	Maximum Electrical Current	25 ma (Max.)		
	Rated Electrical Excitation	8 - 32 VDC		
OUTPUT	Full Scale Output (FSO)	5 VDC		
	Zero Unbalance (0 PSID)	0 VDC		
	Output Impedance	50 Ohms (Typ.)		
	Total Error Band	0.5% (Typ.) *(End Point Settings, Combined Non-Linearity, Hysteresis, Repeatability and All Thermal Effects Included)*		
	Bandwidth (-3dB)	DC to 2500 Hz		
	Resolution	Infinitesimal		
	Insulation Resistance	100 Megohm Min. at 50 VDC		
ENVIRONMENTAL	Operating Temperature Range	-40°F to +275°F (-40°C to +135°C) (Max.)		
	Compensated Temperature Range	-4°F to +257°F (-20°C to +125°C)		
	Linear Vibration	50g Peak, Sine 10 to 2000 Hz		
	Mechanical Shock	100g half Sine Wave 11 msec. Duration		
PHYSICAL	Electrical Connection	4 Conductor Viton Cable 1 Meter Long		
	Weight	20 Grams Excluding Cable		
	Sensing Principle	Fully Active Four Arm Wheatstone Bridge Dielectrically Isolated Silicon on Silicon		
	Torque	50 Inch-Pounds (Max.) 6Nm		

Note: Custom pressure ranges, accuracies and mechanical configurations available. Dimensions are in inches. Dimensions in parenthesis are in millimeters. All dimensions nominal. (M) Continuous development and refinement of our products may result in specification changes without notice. *Copyright © 2014 Kulite Semiconductor Products, Inc. All Rights Reserved.*
Kulite miniature pressure transducers are intended for use in test and research and development programs and are not necessarily designed to be used in production applications. For products designed to be used in production programs, please consult the factory.

KULITE SEMICONDUCTOR PRODUCTS, INC. • One Willow Tree Road • Leonia, New Jersey 07605 • Tel: 201 461-0900 • Fax: 201 461-0990 • http://www.kulite.com